TGHC60

60 GPM MAX

WARNING

BEFORE BEGINNING INSTALLATION OF THIS PRODUCT READ AND FOLLOW ALL INSTALLATION INSTRUCTIONS

TANKGuard

INSTALLATION & OWNERS MANUAL

Index Page:

WARRANTY

All TankGuard, Inc. products are warrantied for 1 year of service, but in no case more than 2 years beyond the original date of purchase. TankGuard warrants the product as free from defects in materials and workmanship under normal recommended use.

In order to consistently bring you the highest quality, full-featured products, we reserve the right to change our specification and designs at any time.

TANKGuard

QUALITY SYSTEM CERTIFICATION DNV·GL ISO 9001

FEATURES INCLUDE:

- Stainless Steel Construction
- The basic size of our cooler is 22"x22"x12.5", making it the most compact cooler in its class.
- 6 Gallon Hydraulic Reservoir
- Weight: 140 lbs dry, making it the lightest hydraulic cooler in its class
- Flow Rate to 60gpm
- Pressure rated to 3000 psi
- Heat rejection is 28HP at 60gpm with 80°F ETD. This is the highest heat rejection in its class
- Hydraulic filter – This filters your return fluid with a ten micron filter, has an integral bypass valve, and baffle. It also conveniently filters the oil that is added to the reservoir.
- Filter Element = 10 micron
- Filter Bypass valve- Set at 36 psi. This feature protects the filter from over pressurization due to cold oil or a blocked element.
- System Cold Oil Bypass Valve – Set at 60psi. This feature ensures that the low pressure side of the hydraulic system stays at a low pressure. Primarily protects from over pressurization due to cold oil.
- System relief valve – This Feature ensures that the maximum system pressure does not go any higher than what you set the valve at. Factory set at 3000psi and is adjustable from 500psi to 3000psi.
- Flow control valve – This feature ensures the delivery of consistent flow to the hydraulically powered cooling blower motor. It is factory set to ensure the most efficient blower speed.

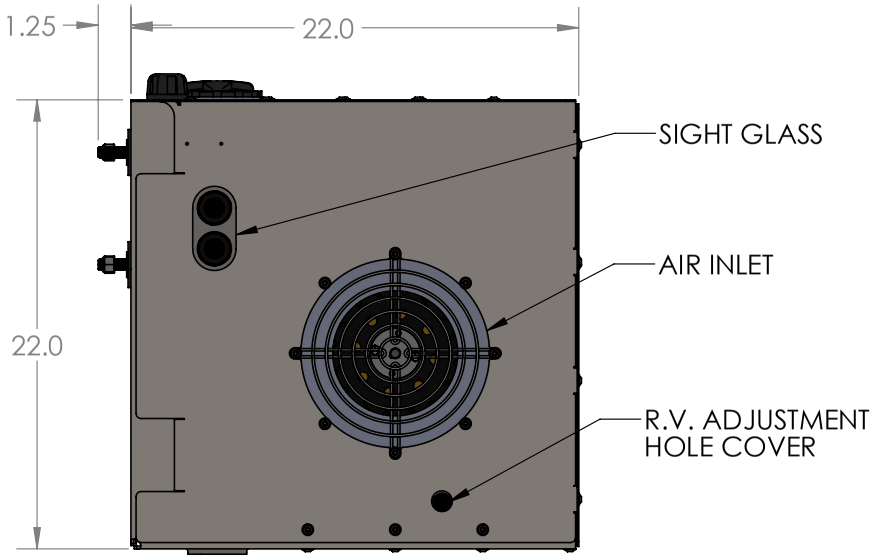

LEFT SIDE VIEW

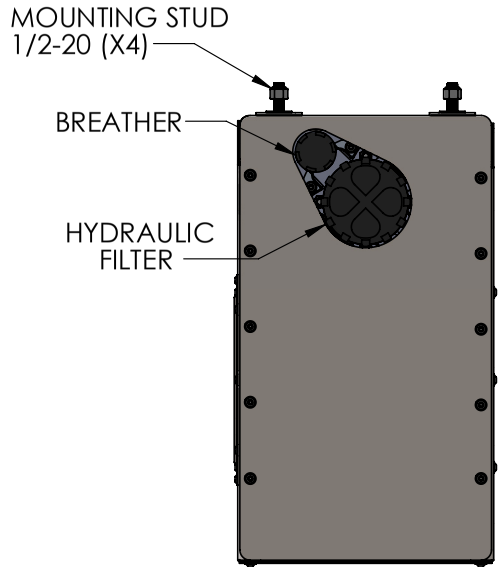

TOP VIEW

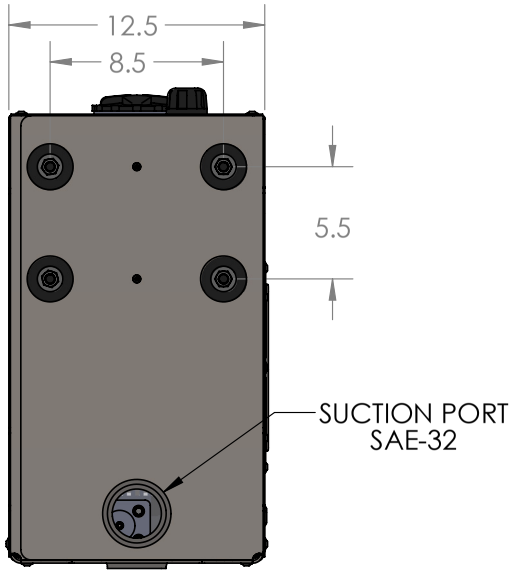

BACK VIEW

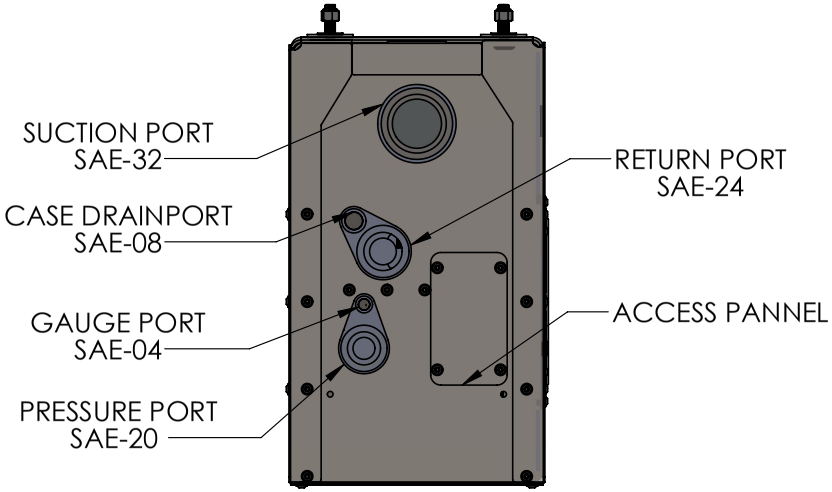

BOTTOM VIEW

FIGURE 1: TGHC-60 Dimensions

INSTALLATION & OPERATION

Warning: High Pressure oil can cause severe injury. Turn off PTO and bleed pressure before servicing hydraulic system.

Warning: heavy object. To avoid muscle strain or back injury, use lifting aids and proper lifting technique when removing or replacing.

Warning: Rotating Fan Blade. Can cause serious injury or cut. Keep hands clear. Turn off and lockout unit before servicing.

Caution: Surface May be Hot. Ensure PTO is off and unit has cooled before servicing.

POSITIONING AND MOUNTING:
The TGHC-60 is designed to fit in very tight spaces, its narrow profile allows for behind the cab or frame rail mounting. Unit will ship with a mounting template to aid in proper installation. (See FIG. 6) The TGHC-60 requires at least 2" air gap on the fan shroud side to allow for adequate air intake.

CONNECTIONS (SEE FIG.2):
Note: SAE ports do not require a thread sealant, they seal with an o-ring. Make sure your SAE fittings have a properly sized o-ring and are free of thread sealant.

Suction Port-32 SAE – Your hose will go from this port to the pump inlet port. Minimum hose size – 2".

Pressure Port -20 SAE – The hose from your pump output will "T" into this port. One side of the "T" supplies the 2.25gpm to the hydraulic fan. Flow will only be greater than 2.25gpm through this line if the pressure relief valve setting is exceeded. The other side of the "T" runs to the motor input or control valve input depending on your system. Minimum hose size – 1.0".

Case Drain -8 SAE – Some hydraulic pumps, motors, and control valves have a case drain line that needs to be plumbed directly back to the cooler reservoir. This is where you will make that connection. If your hydraulic system does not require a case drain line simply leave the TankGuard provided hex plug in this port. This plug also doubles as the drain plug for the tank.

Return Port -24 SAE – The hose from the outlet of your motor or control valve should be plumbed into this port. This port takes all of the return flow from your motor and sends it through the filter and heat exchanger built into the TGHC-60. Minimum hose size – 1.5".

Gauge Port -4 SAE – This is a test port on the bottom of your cooler. This port is connected to the input port of the manifold, for the purpose of connecting diagnostic equipment like a gauge or transducer to system pressure.

START UP PROCEDURE:
This Unit comes ready to install, no assembly required.

Make up all hydraulic connections.

With the PTO disengaged, remove filter cap from top of cooler. Leave filter in place and add fluid until the bottom gauge is full and the top gauge is empty as shown. This will filter the fluid as it is being added. Even new hydraulic fluid should be filtered. You will need to add hydraulic fluid in slowly because the filter is in place.

Bleed air from lines and check fluid level again. Ensure that the lines are full of fluid and the air is bled from your system, some pumps and motors, particularly piston will be ruined in a matter of seconds if operated without fluid.

Depending on the length and diameter of the system hoses you may need to add fluid to the reservoir several times.

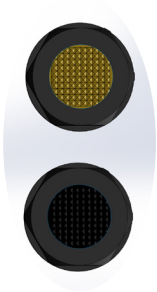

Install filter cap.

Slowly engage PTO with engine at idle speed.

Check for hydraulic leaks and repair as needed

Check for fan operation. Note that the fan will turn slowly when system pressure is low.

Recheck reservoir fluid level. Each time you add fluid disengage PTO, if the reservoir gets completely empty before you add fluid you will need to bleed air from the lines again.

Pressure relief valve setting – The TGHC-60 pressure relief valve is factory set to 3000psi. This is a good setting if all of your other system components are rated to at least 3000psi. Failure to set the relief valve 200psi higher than system pressure or any other system relief valve will result in excess build up of heat. If you need to adjust the TankGuard pressure relief valve it can be accessed by removing the access panel at the bottom of the cooler and the R.V. side plug to manually adjust. The change in pressure is roughly a 125 PSI per quarter turn. Any time the side cover is off the PTO should be off as well.

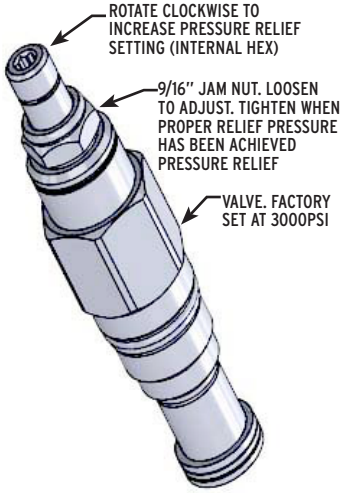

Once you verify system functionality with no leaks and the proper fluid level your TGHC-60 is ready for operation.

SYSTEM MAINTENANCE:

Filter – Unscrew filter cap (use a screw driver or tool with a square shank) and replace element every three months.

Fluid – Check fluid level daily (with the PTO off the fluid level should completely fill the bottom sight glass with no fluid showing in the top sight glass). Drain and replace hydraulic oil every 6 to 12 months depending on use.

Recommended Fluid – Use non foaming hydraulic fluid and see Pump and Motor Manufacturer recommendations.

Clean Radiator – Use a mild cleaner compatible with aluminum. Be careful not to damage fins if using a power washer to rinse cleaner off of radiator. Visually inspect daily and clean if necessary.

TGHC-60 WITH DIRECTIONAL CONTROL VALVE

FIGURE 2: Typical Installation Examples

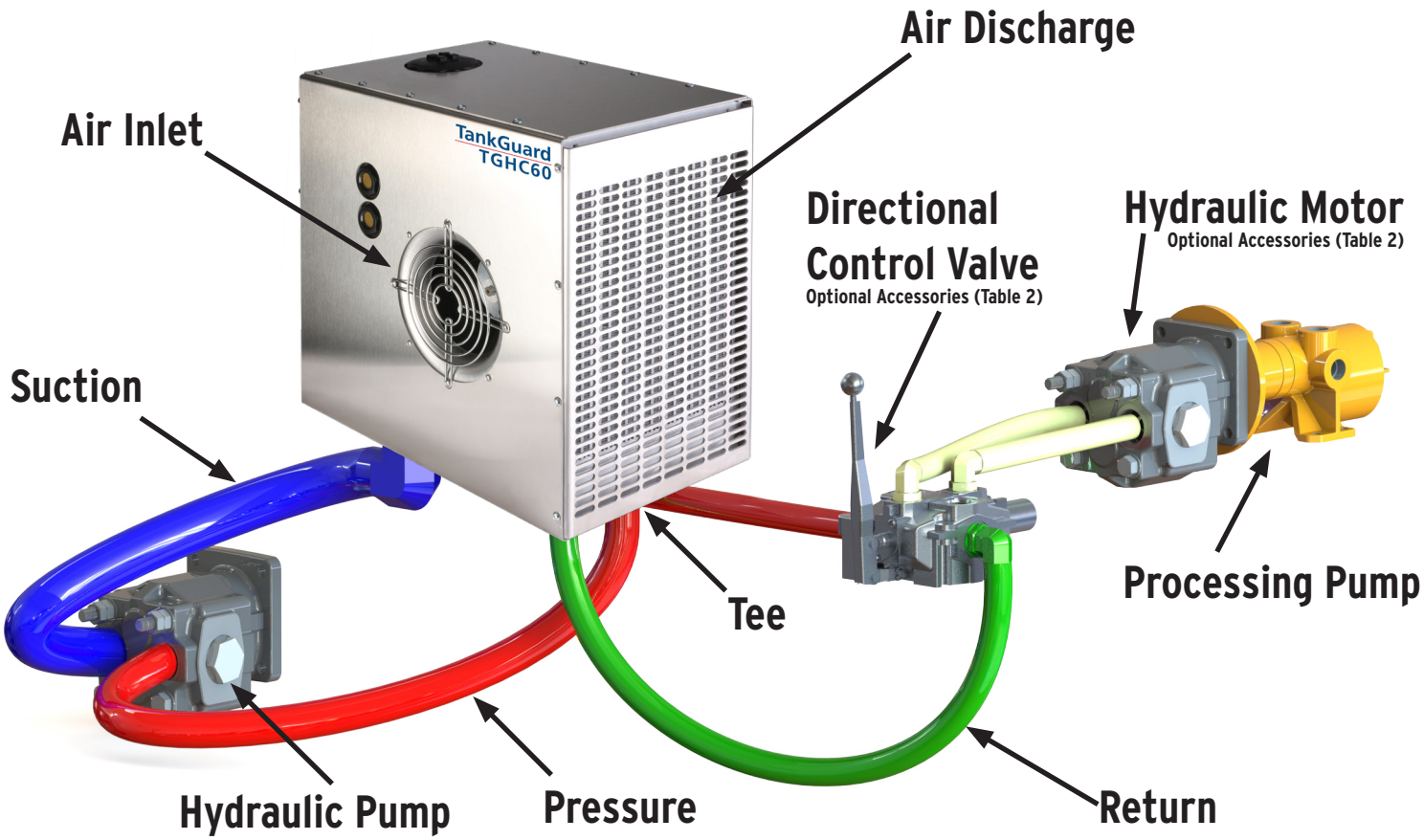

TGHC-60 WITHOUT DIRECTIONAL CONTROL VALVE

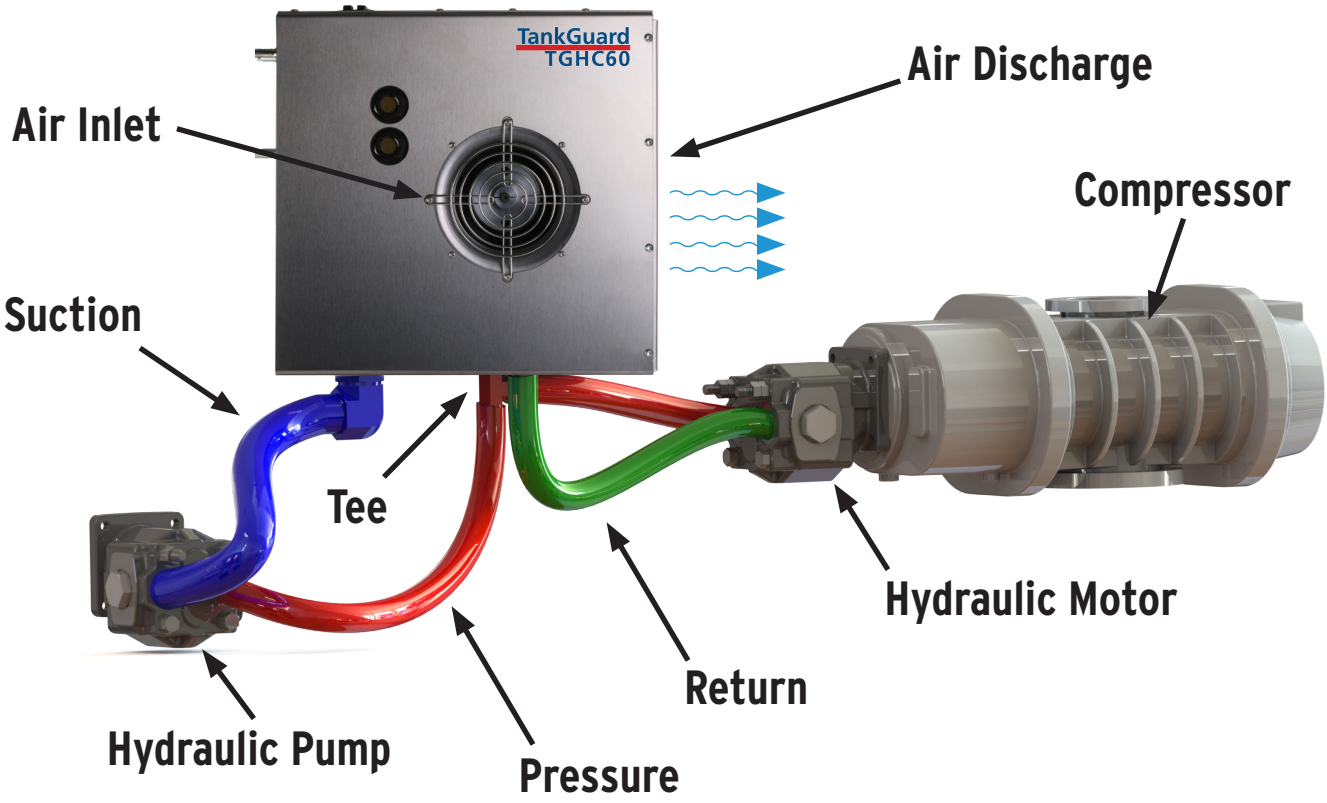

FIGURE 3: TGHC-60 External Shell Exploded View

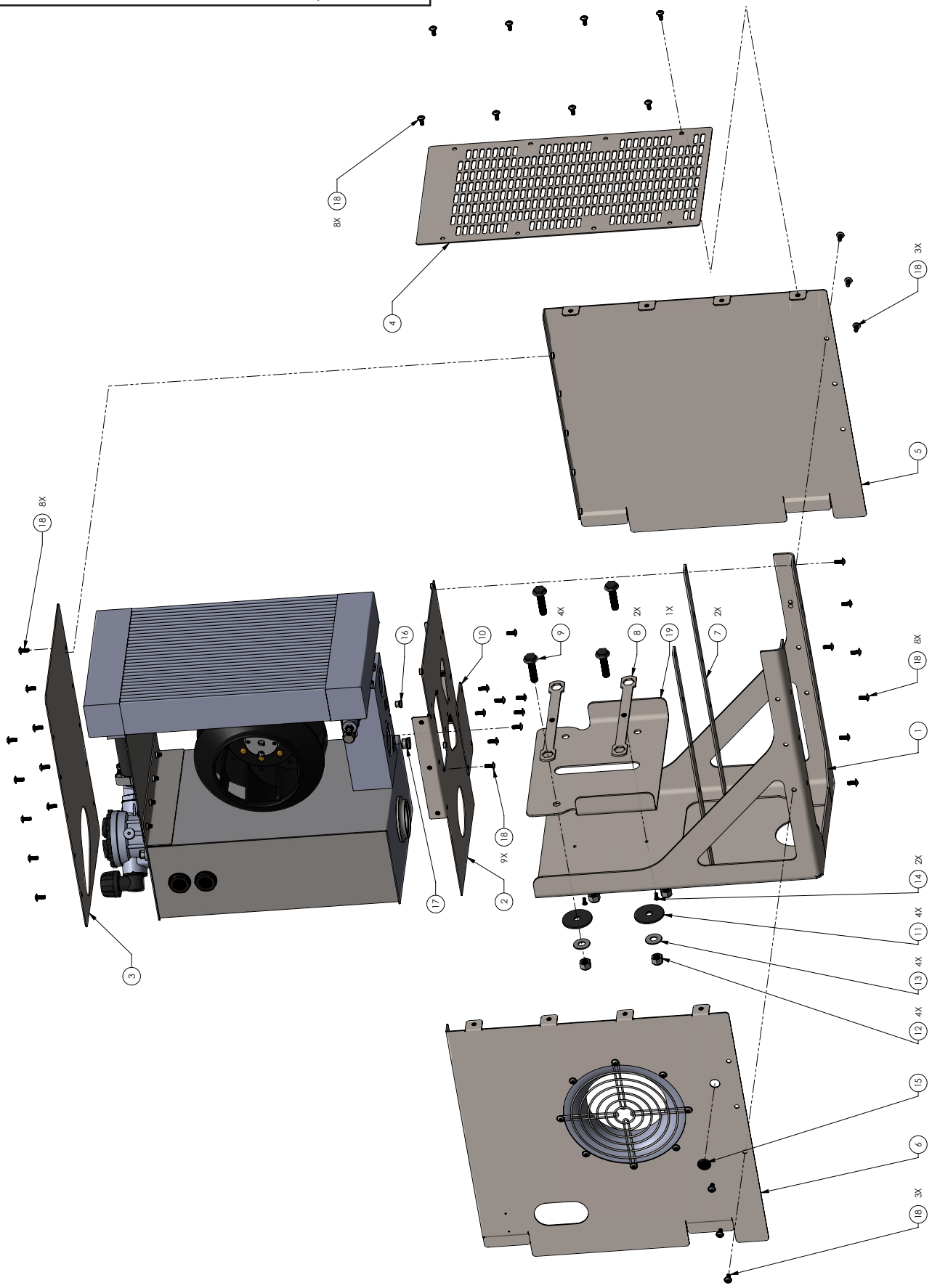

FIGURE 4: TGHC-60 Internal Components Exploded View

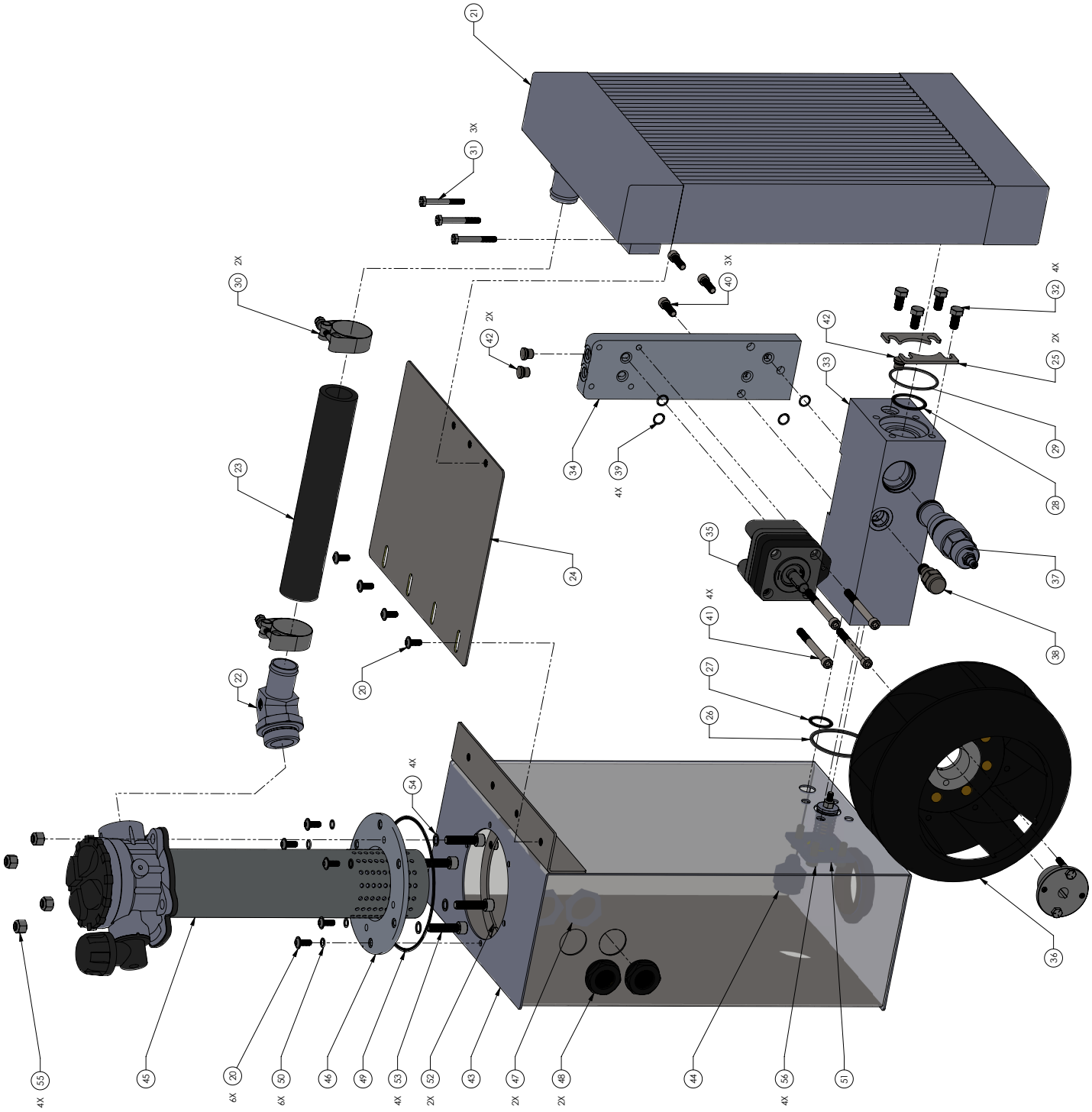

TABLE 1: PARTS LIST					
ITEM NO.	PART NUMBER	DESCRIPTION	QTY.	TORQUE	REQUIRED TOOL
1	7998	FRAME WELDMENT, TGHC-60	1		
2	8001	BOTTOM SUPPORT, TGHC-60	1		
3	7997	TOP PANEL, TGHC-60	1		
4	8287	FRONT PANEL, TGHC-60	1		
5	8005	RIGHT PANEL, TGHC-60	1		
6	8109	LEFT SIDE PANEL ASSEM	1		
7	8198	FRAME SPACER 1.1X21.5 LG	2		
8	8172	ANTI ROTATION PLATE	2		
9	8173	FLANGE BOLT 1/2-20	4	100 FT-LB	3/4" END WRENCH
10	8092	PLATE GA 3.75X6.5	1		
11	7860	WASHER, RUBBER .5IDX2.25OD	4		
12	7714	1/2-20 NYLON LOCKNUT	4	100 FT-LB	3/4" END WRENCH
13	7713	18-8 SS FLAT WASHER	4		
14	5737	CAPS 10-32x1/2 BH SS	2	1.75 FT-LB	1/8" ALLEN
15	6348	CAPPLUG 3/4 FLAT HEAD	1		
16	7644	-04 SAE PLUG	1	13 FT-LB	3/16" ALLEN
17	7726	-08 SAE PLUG	1	40 FT-LB	5/16" ALLEN
18	7709	1/4-20 X 5/8" SS TORX T27 BUTTON HD	37	6.3 FT-LB	T27 TORX
19	8338	REINFORCING BRACKET, TGHC-60	1		
20	7709	1/4-20 X 5/8" SS TORX T27 BUTTON HD	10	6.3 FT-LB	T27 TORX
21	7962	TGHC-60 HEAT EXCHANGER	1		
22	8104	FITTING ELBOW 20MORB-20HB 45	1	115 FT-LB	1 7/8" END WRENCH
23	8106	HOSE, HYD #20 TGHC-60	1		
24	7990	TGHC-60 BRACKET, TANK MNT	1		
25	8084	HE-MANIFOLD PLATE	2		
26	8110	O-RING 2-231 2 7/8 OD 2 5/8 ID	1		
27	1733	O-RING 2-212 1 1/8 OD 7/8 ID	1		
28	2574	O-RING 2-220 1 5/8 OD 1 3/8 ID	1		
29	8111	O-RING 2-138 2 5/16 OD 2 1/8 ID	1		
30	8171	HOSE CLAMP	2	6.5 FT-LB	3/8 END WRENCH
31	7841	HH 1/4-20 X 2" CAP SCREW	3	10 FT-LB	7/16" END WRENCH
32	8169	HEX 3/8-16, 3/4 LG, SS	4	22.7 FT-LB	9/16" END WRENCH
33	7989	TGHC-60 MANIFOLD	1		
34	7594	ADAPTER, MANIFOLD	1		
35	8095	HYDRAULIC MOTOR TGHC-60	1		
36	8096	CENTRIFUGAL FAN 250 MM	1	7.9 FT-LB	7/16" END WRENCH
37	8105	RELIEF VALVE, TGHC-60	1	155 FT-LB	1 1/4" END WRENCH
38	8103	FLOW REG, TGHC-60	1	22 FT-LB	15/16" END WRENCH
39	1195	O-RING 2-013 9/16 OD 7/16 ID	4		
40	7653	SHCS 3/8"-16 SS 1" LG	3	23 FT-LB	5/16" ALLEN
41	7654	MOTOR MANIFOLD SHCS 5/16"-18	4	13 FT-LB	1/4" ALLEN
42	7644	-04 SAE PLUG	4	13 FT-LB	3/16" ALLEN
43	7983	TANK WELDMENT TGHC-60	1		
44	7646	12FJ-08MJ STRAIGHT LARGE HEX	1	40 FT-LB	1 1/4" DEEP WELL SOCKET
45	8093	HYDRAULIC FILTER	1		
46	7986	CLEANOUT COVER 6.50 OD	1		
47	7650	BSPP LOCKNUT (FOR USE WITH SIGHTGLASS)	2	8 FT-LB	1 5/8" SOCKET
48	7660	SIGHT LEVEL PLUG 1" BSPP	2	8 FT-LB	1 1/2" SOCKET
49	7662	O-RING O-258 6 1/4"OD 6"ID (CLEAN OUT COVER)	1		
50	3711	O-RING 2-011 IL 7/16OD 5/16ID	6		
51	8196	BYPASS VALVE, 60 PSI	1		
52	7981	CLEANOUT COVER RING 6.50 OD	2		
53	7711	3/8-16 X 1 1/2 SHCS BOLT 18-8	4	20 FT-LB	5/16" ALLEN
54	7842	SEALING WASHER, COPPER	4		
55	7710	3/8-16 X 1 1/2" LOCK NUT 18-8	4	10 FT-LB	9/16" END WRENCH
56	8168	CAPS 3/8-16, 3/4 LG	4	25.7 FT-LB	5/16" ALLEN

TABLE 2 ACCESSORIES					
ITEM NO.	PART NUMBER	DESCRIPTION	QTY.	TORQUE VALUE	REQUIRED TOOL
57	8306	STOCK FILTER ELEMENT 10 MICRON	1		SQUARE SHANK SCREW DRIVER
58	8307	INORGANIC FILTER ELMNT 10 MICRON	1		SQUARE SHANK SCREW DRIVER
59	8308	RV CAVITY PLUG	1	155 FT-LB	1 1/8" SOCKET
60	FRM-30	TGHC-30 & 60 NO DRILL BRACKET	1		

TABLE 3: TROUBLE SHOOTING GUIDE		
Problem	Cause	Corrective Action
Fan not spinning	Low system pressure	The system pressure must be higher than 1000 psi for the fan to spin at full speed. Slower fan speeds in an unloaded condition are part of normal operation
	Low oil level in tank	Fill Tank, tighten fittings, and bleed air from lines
	Air leak in suction hose or fitting connections	Tighten fittings and bleed air from lines
	Collapsed Suction Hose	Replace suction hose
	Flow Control Valve has blocked orifice	Remove and clean or replace valve. Change fluid and filter element
	Fan sucked in road trash such as a plastic bag and has caused fan to be in a bind	With Unit de-energized, remove debris, check for proper torque of hub bolts. Check to make sure the fan is not broken or cracked and motor functions properly
High Oil Temperature	Dirty Heat Exchanger Assembly	Clean Heat Exchanger. Use mild cleaner compatible with aluminum. Be careful not to damage fins when using a pressure washer.
	System Relief Valve is opening	Ensure that valve relief pressure is set higher than your system pressure. Remove and clean or replace valve. Change fluid and filter element
	low oil level in tank	Fill Tank and tighten fittings
	Collapsed Suction Hose	Replace suction hose
	Air leak in suction hose or fitting connections	Bleed air and tighten fittings
Aeration of oil (Milky looking oil)	Water Contamination	Replace Fluid and Filter Element. Check all fittings and Filter Cap for tightness
	Air leak in suction hose or fitting connections	Tighten fittings and bleed air from lines
	Pump is not lower than the tank	Reposition to ensure the fluid can gravity feed into the pump through the suction line.
	Restricted suction line	Route suction line to make as straight and short of a run as possible. Ideally you would want a 2.5" suction line for minimum flow restriction.
	low oil level in tank	Fill Tank and tighten fittings, verify proper fill level before use
Heat exchanger Assembly leaks	Loose Fittings or cut o-rings	Replace o-rings and tighten fittings
	Burst Heat Exchanger	Replace Cold start relief valve and Heat exchanger assembly

TGHC-60 REPAIR: (Refer to FIG.5, Table 4)

Be sure to turn off PTO, lockout unit, allow time for fluid to cool, and bleed hydraulic pressure, before removing any body panels or hoses on or connected to TGHC-60.

Drain hydraulic fluid from unit by removing the case drain plug (Item 17, FIG.3), once all the fluid has been drained replace and torque according to Table 1. Do not re-use this fluid. Remove all connections to the TGHC-60, these connections will be wet so be sure to have a catch pan for the fluid that will be spilled. Cap and plug all hoses and ports to prevent contamination. It is recommended to do any repair work on a clean surface in a dust free environment.

Most repairs, such as fan, motor, relief and flow control valves, can be accessed by simply removing the left side panel then removing and replacing the part. To remove the left side panel (Item 7, FIG.5) you must remove the front and top panels as well. If more in depth repairs are necessary, simply remove the three manifold bolts and the two radiator bolts that fasten the manifold and radiator to the base plate. The entire internal assembly can then be lifted out of the frame.

Once the TGHC-60 is out of its frame you will be able to remove and replace any of the components. If the repair requires you to remove the tank mount bracket (Item 24, FIG 4) mark the position of the bolts on the tank mount bracket so you can reinstall in the same position. This will ensure that your sight glass and tank caps will fit concentrically within the case when you put the TGHC-60 back together. When you re-assemble the TGHC-60 be sure use blue loctite on all fasteners and torque according to Table 1.

TABLE 4: REPAIR

ITEM NO.	PART NUMBER	DESCRIPTION	QTY.	TORQUE VALUE	REQUIRED TOOL
1	8287	FRONT PANEL, TGHC-60	1		
2	7709	1/4-20 X 5/8 SS TORX T27 BUTTON HD	8	6.3 FT-LB	T-27 TORX
3	7997	TOP PANEL, TGHC-60	1		
4	7709	1/4-20 X 5/8" SS TORX T27 BUTTON HD	10	6.3 FT-LB	T-27 TORX
5	8092	ACCESS PLATE	1		
6	7709	1/4-20 X 5/8" SS TORX T27 BUTTON HD	4	6.3 FT-LB	T-27 TORX
7	8109	LEFT SIDE PANEL ASSM	1		
8	7709	1/4-20 X 5/8" SS TORX T27 BUTTON HD	3	6.3 FT-LB	T-27 TORX
9	6348	CAPPLUG 3/4 FLAT HEAD	1		FLAT HD SCREW DRIVER
10	8105	RELIEF VALVE, TGHC-60	1	155 FT-LB	1 1/8 SOCKET
11	8103	FLOW REG, TGHC-60	1	22 FT-LB	15/16 SOCKET
12	7709	1/4-20 X 5/8" SS TORX T27 BUTTON HD	3	6.3 FT-LB	T-27 TORX

FIGURE 5: TGHC-60 REPAIR

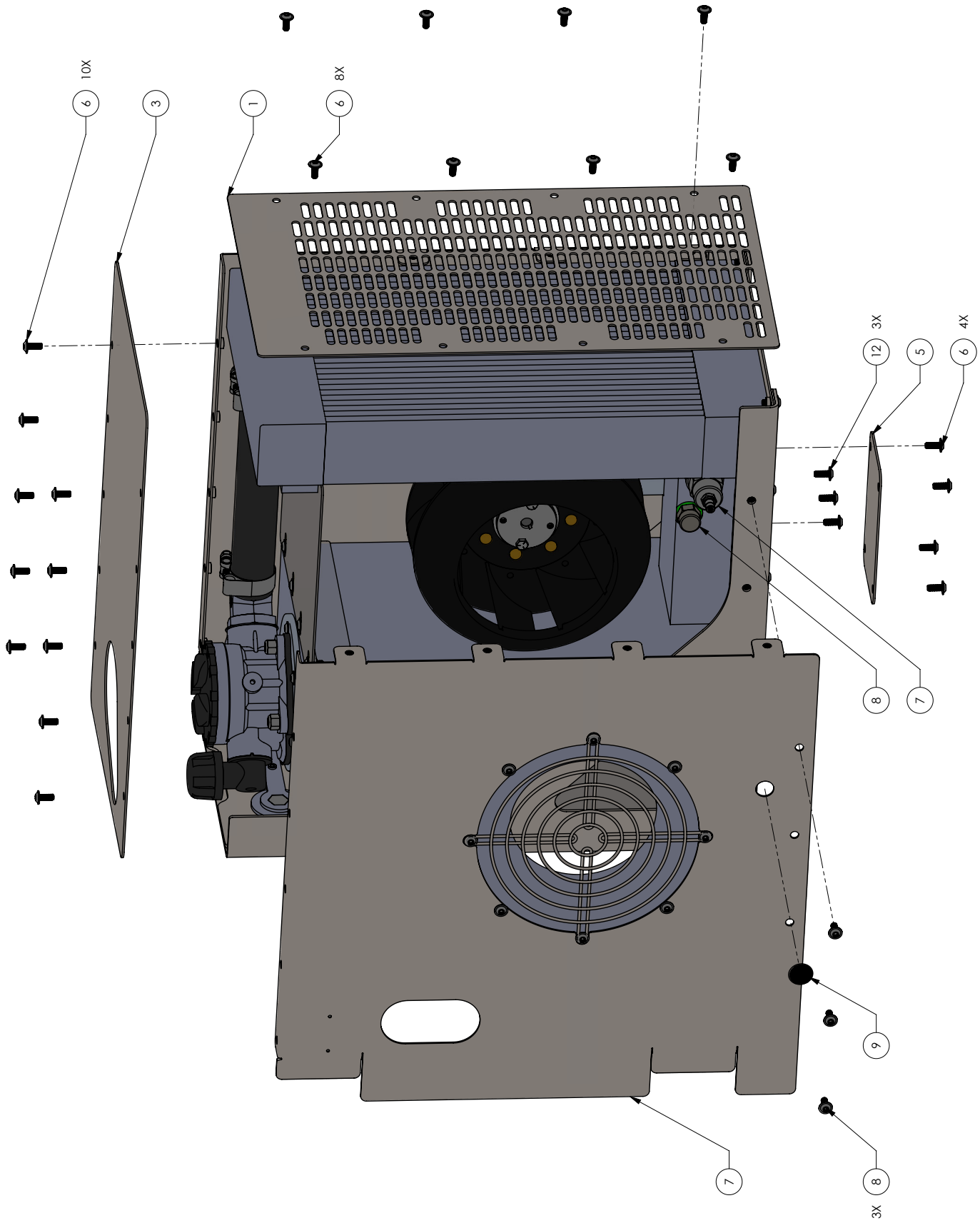

DRILL DIMENSIONS
(NOT TO SCALE)

FIGURE 6

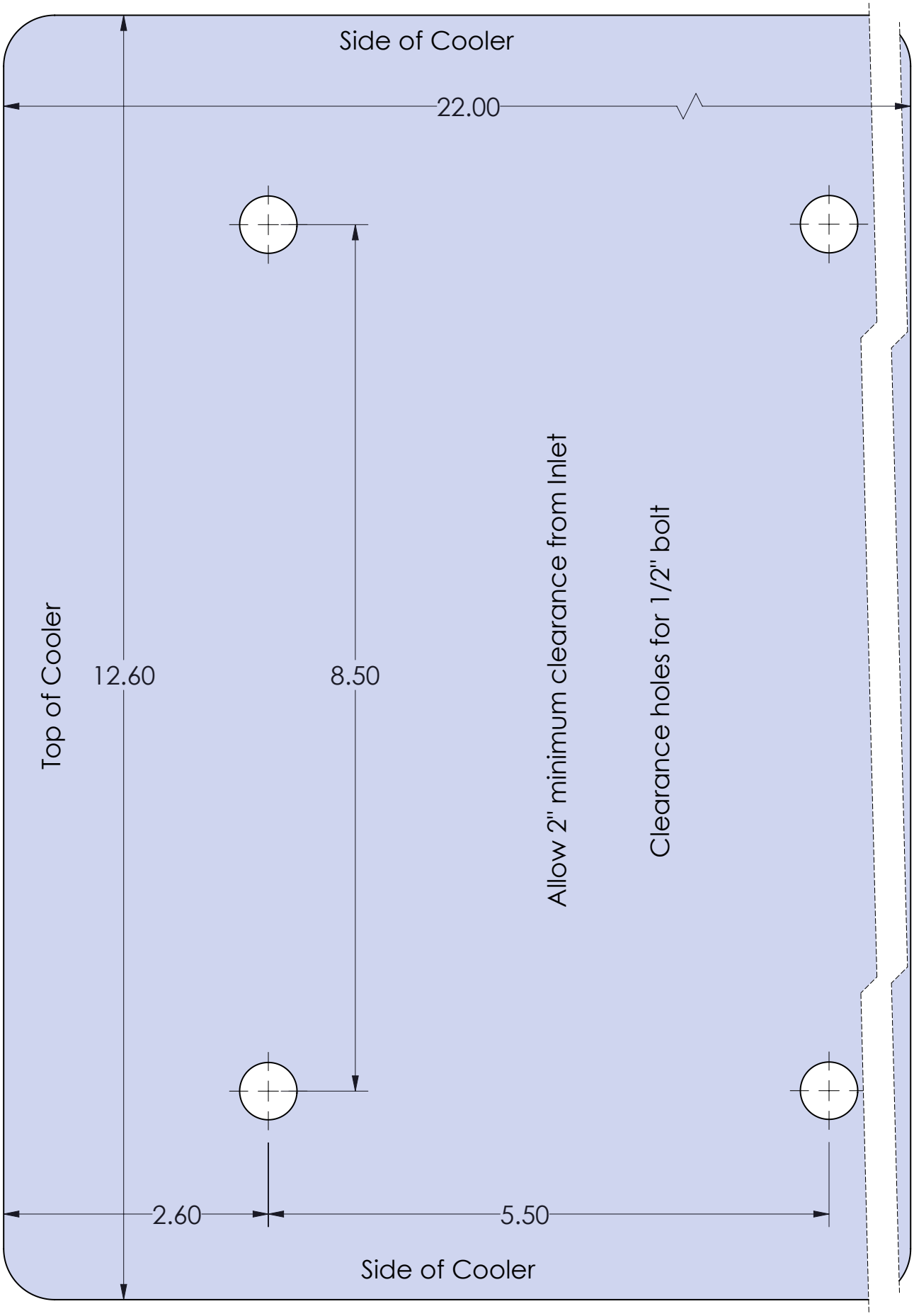

TANKGuard

7600 Sam Houston Pkwy N.
Houston, Texas 77049
281-459-6400